Installation Guide for the ToupTek AAF Motor Focuser on the Skywatcher Maksutov 180/2700

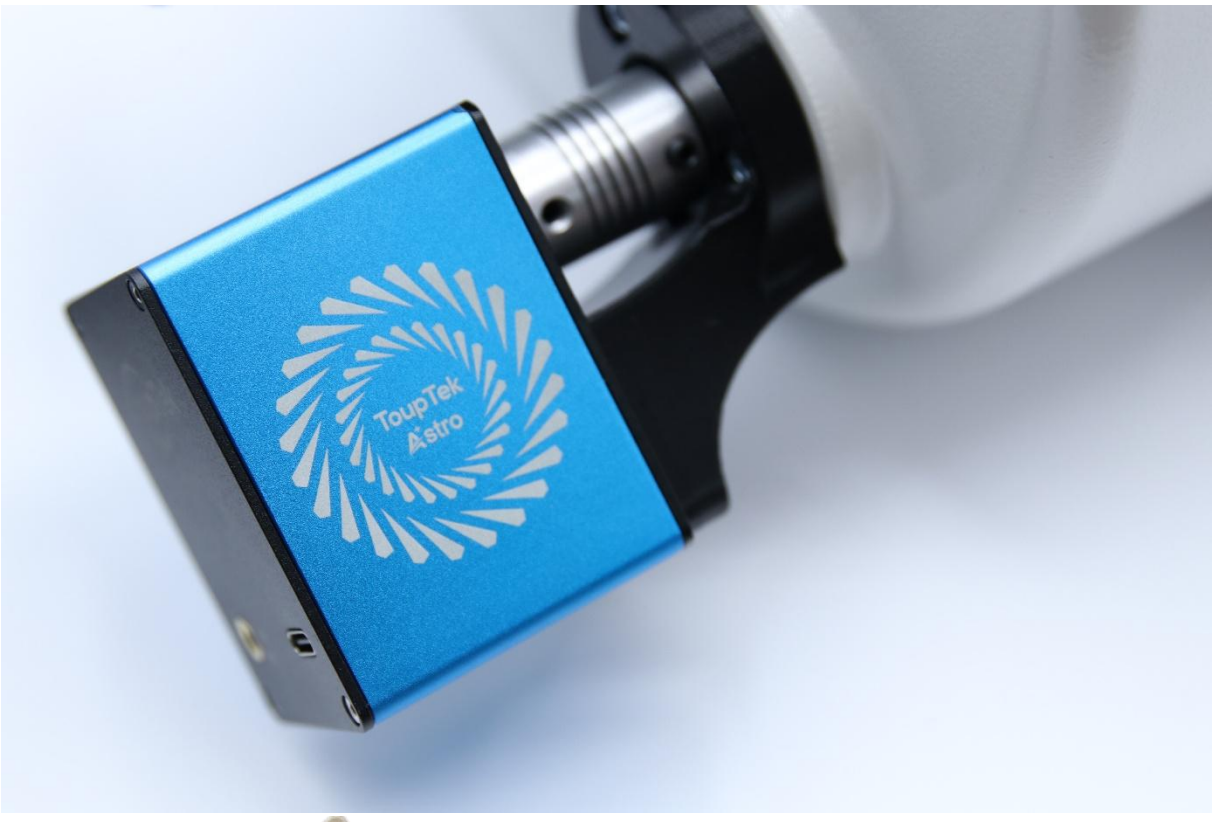

Package Contents:

1) Motor Mount Bracket

2) M3×16 mm Hex Socket Screws

3) Shaft Adapter

Tools required for installation (not included):

- 3 mm hex key (Allen key)

Important for all 3D printed parts:

Do not overtighten any screws. Tighten them carefully until you feel firm resistance. Do not tighten them any further, as excessive force may damage the 3D printed parts.

For spare parts requests, please provide the color dot shown on the product packaging together with the part number illustrated above. Without this information, we are unfortunately unable to identify the correct spare parts for your kit.

Step 1:

Pull the original rubber knob straight off the front of your Skywatcher Maksutov 180. Simply pull it towards you. The knob is only press-fitted onto the focuser shaft and can be removed without using any tools.

Step 2:

Remove the three screws securing the rear retaining ring of the telescope tube. Carefully lift off the retaining ring and keep both the ring and the three screws in a safe place for reassembly.

Note: Only remove these three screws. Do not loosen or remove any other screws on the telescope.

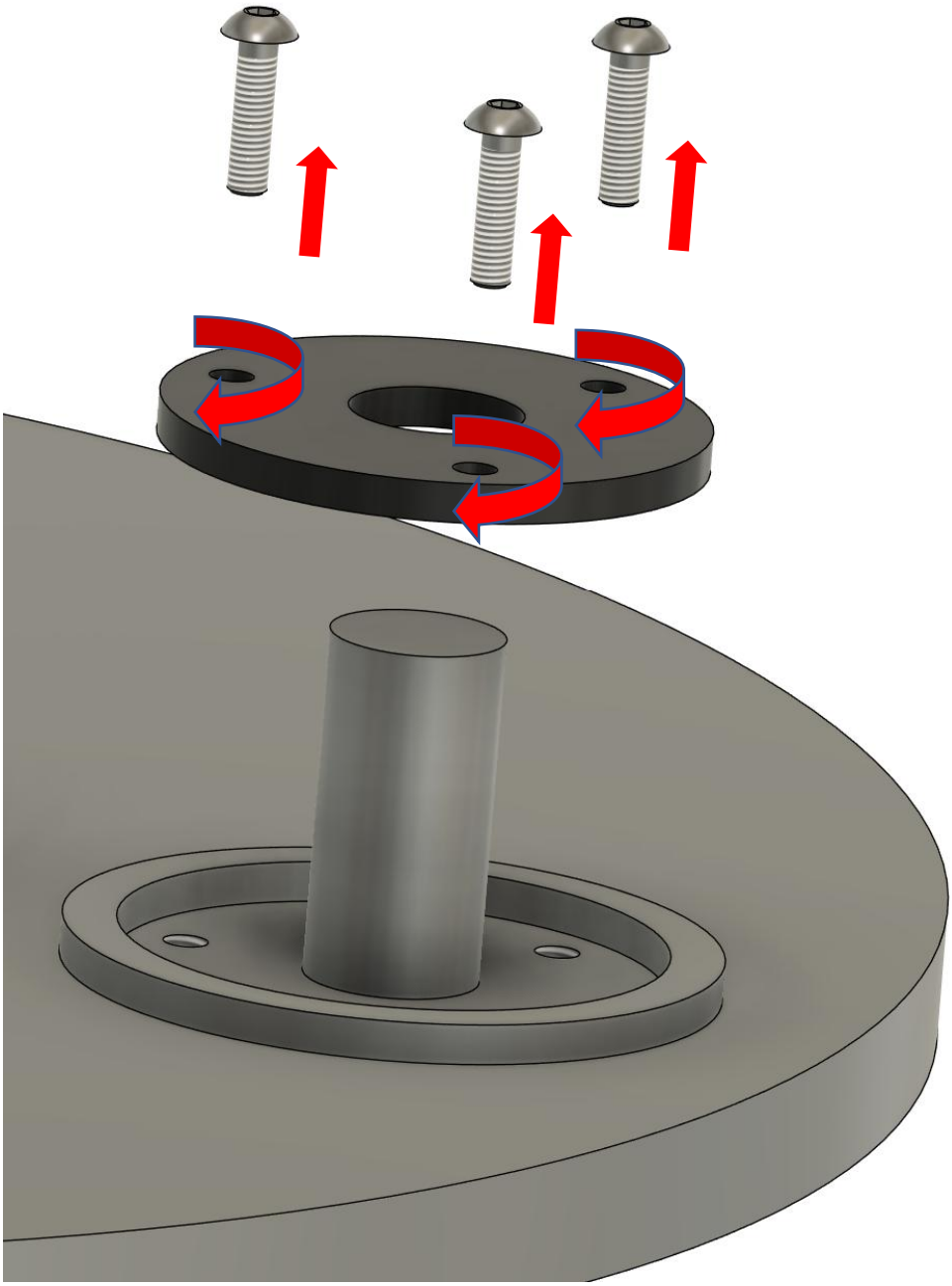

Step 3:

Place the motor mounting bracket (1) onto the rear of the telescope tube. Align the bracket so that its three mounting holes match the threaded holes in the telescope tube exactly. The bracket must sit flat against the rear of the tube (4) and must not be tilted or under tension.

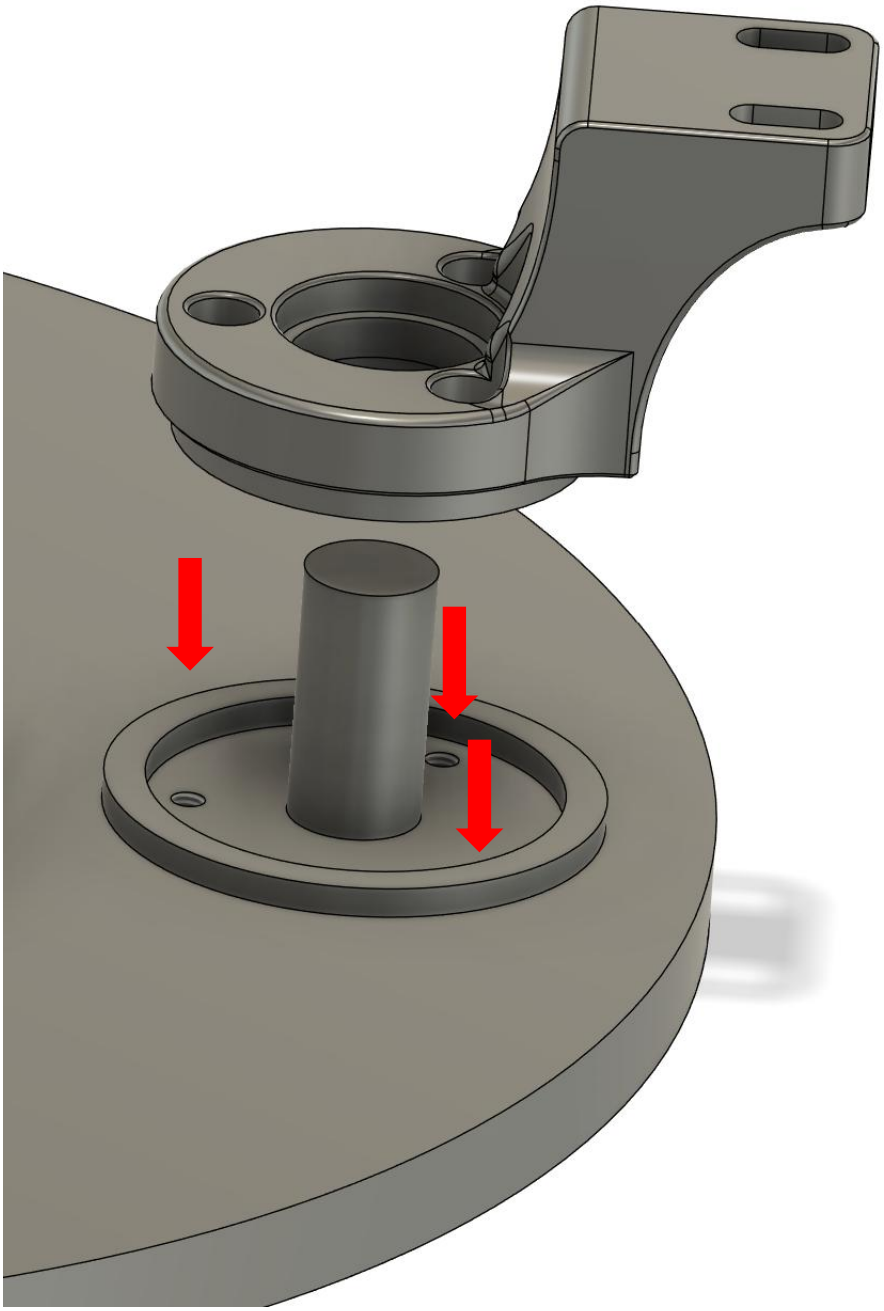

Step 4:

Secure the motor mounting bracket (1) to the telescope tube using the three supplied M3×16 screws (2). Insert all three screws first and tighten them lightly. Once all screws are in place, tighten them evenly.

Note: Tighten the screws by hand only. Do not overtighten, as this may damage the bracket or the threads.

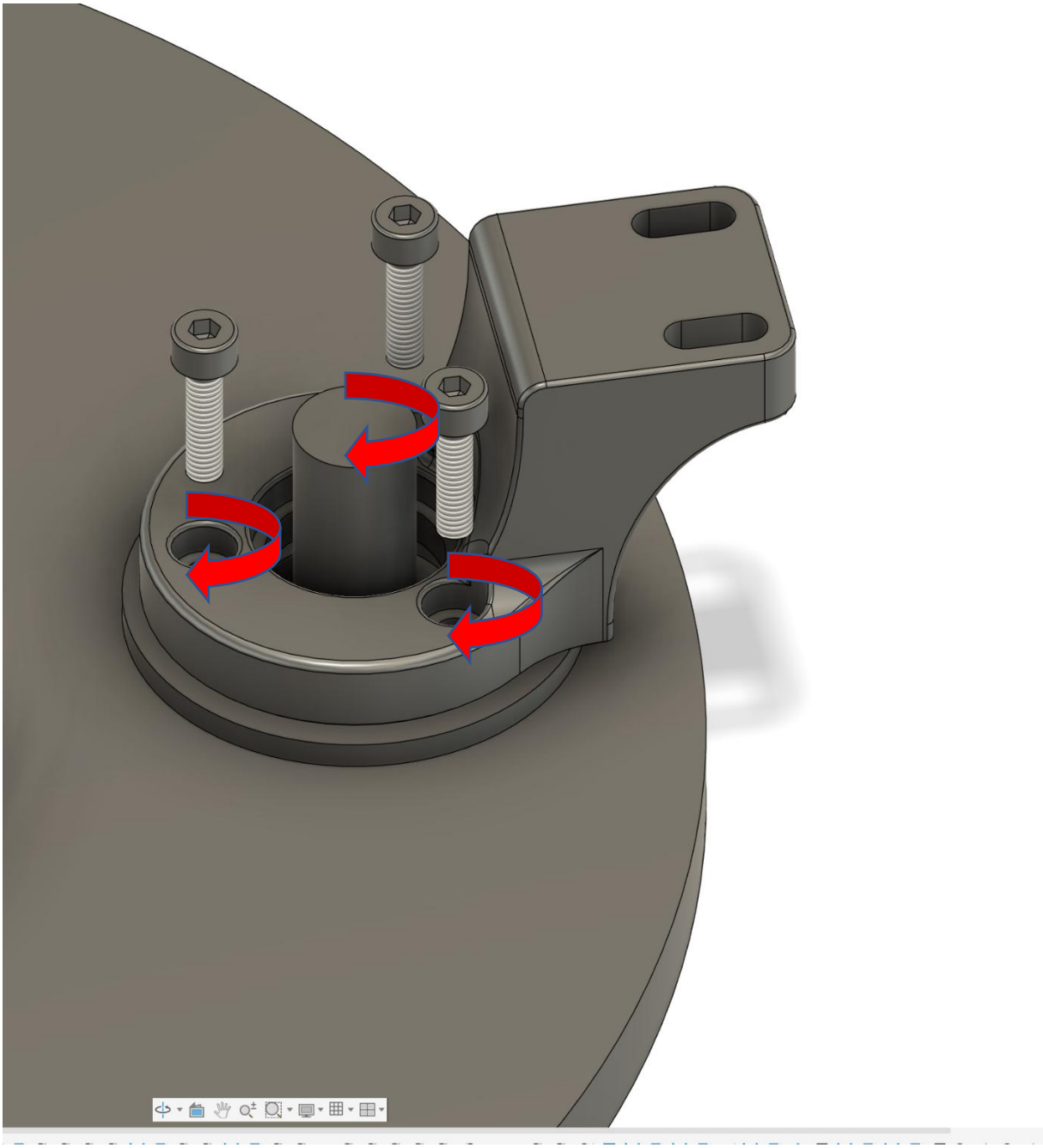

Step: 5

Install the shaft adapter (3) onto the output shaft of the ToupTek AAF. Slide the shaft adapter onto the motor shaft and lightly tighten the two set screws.

Important: Leave a gap of approximately 0.5–1.0 mm between the ToupTek AAF housing and the shaft adapter. The shaft adapter must not touch the motor housing, as this can cause friction or prevent the motor from operating correctly.

Once the correct position has been set, tighten the two set screws evenly.

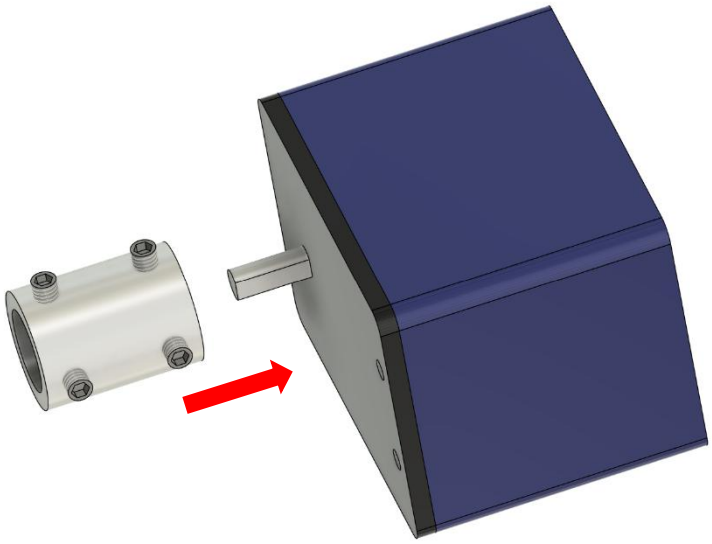

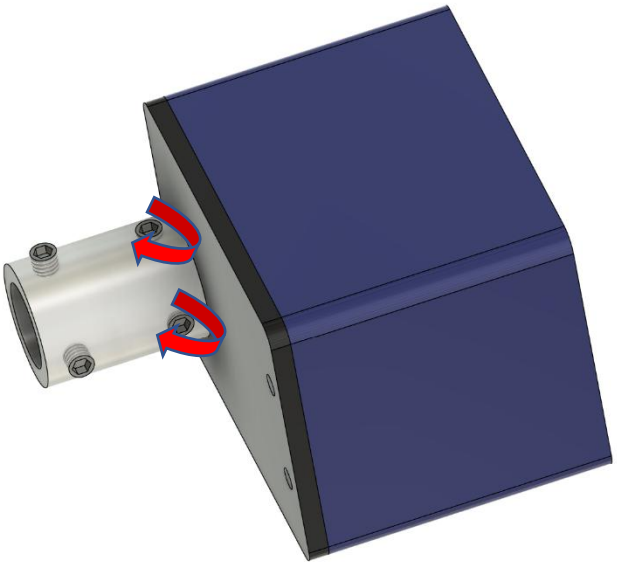

Step: 6

Place the prepared ToupTek AAF, with the shaft adapter already installed, onto the motor mounting bracket. Carefully guide the shaft adapter over the focuser shaft of the Skywatcher Maksutov.

Secure the motor to the mounting bracket using the two M4×10 screws supplied with the ToupTek AAF. Tighten both screws evenly until they are hand-tight.

Next, carefully rotate the shaft adapter by hand until both set screws are easily accessible. In the next step, these set screws will be tightened onto the focuser shaft of the Skywatcher Maksutov.

Note: Make sure the motor sits squarely on the mounting bracket and is not under tension or misaligned before tightening the screws.

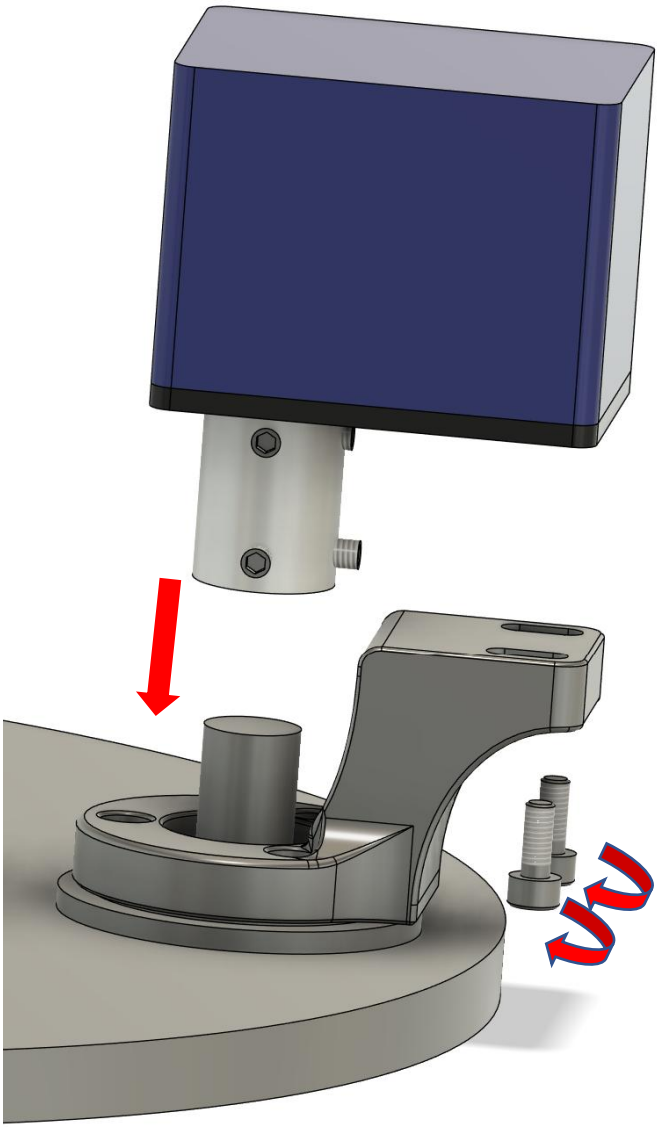

Step: 7

Evenly tighten the two set screws of the shaft adapter until it is securely fastened to the focuser shaft of the Skywatcher Maksutov.

Afterwards, carefully rotate the motor shaft by hand to verify that the focuser moves smoothly and that there is no binding or rubbing.

The installation is now complete. You can now connect the ToupTek AAF using the supplied cable and complete the setup using the ToupTek software.

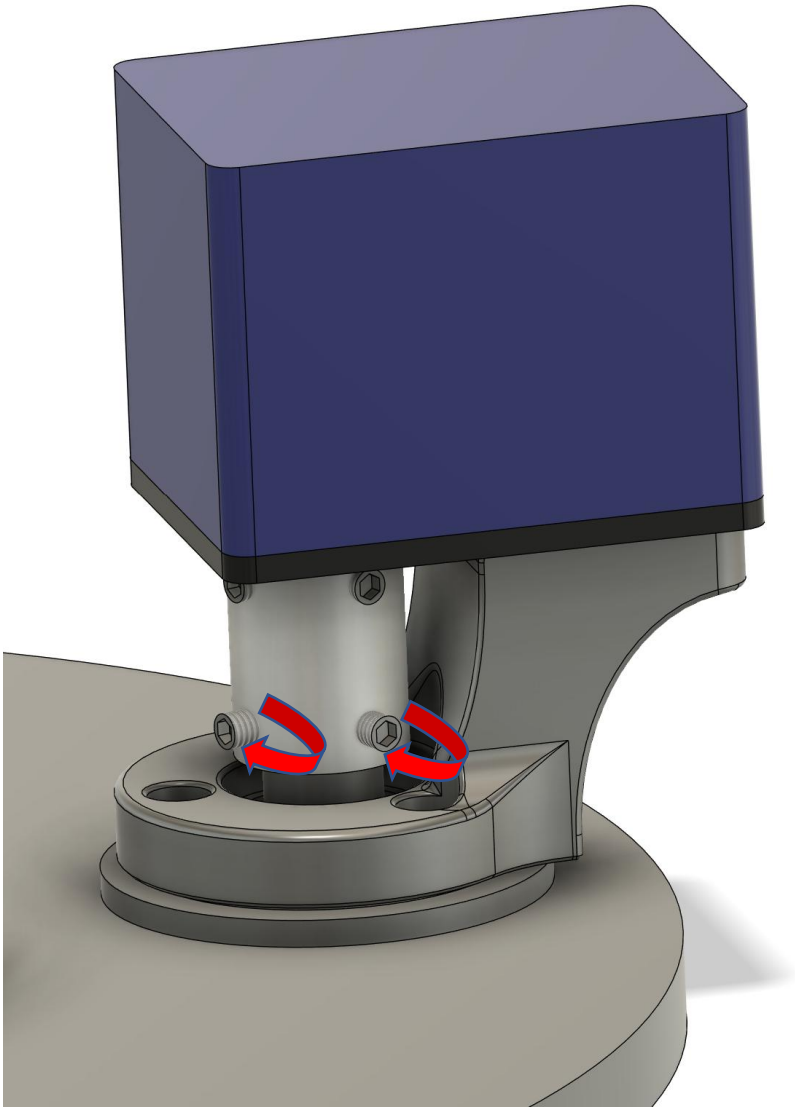

Congratulations! Your installation is now complete.